GENERAL NOTES:

1. Concrete: 28 Day Compressive Strength f'e = 5,000 psi. Type III.
2. Rebar: Grade 60 Per ASTM A615. 1½" Coverage Over-all.
3. Retaining Wall Pieces to be Bolted Together with ½" x -13 Unc Hex Head Cap Screws x 12" LG (Grade 2) with 5" of Thread and (2) ½" Dia. Flat Large OD Washers Supplied by Chase Precast.
4. No Bolt Connnections on Mitered Ends.

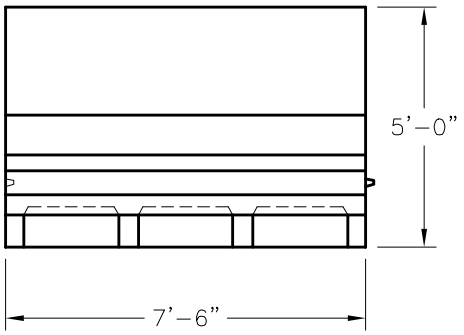

PLAN VIEW

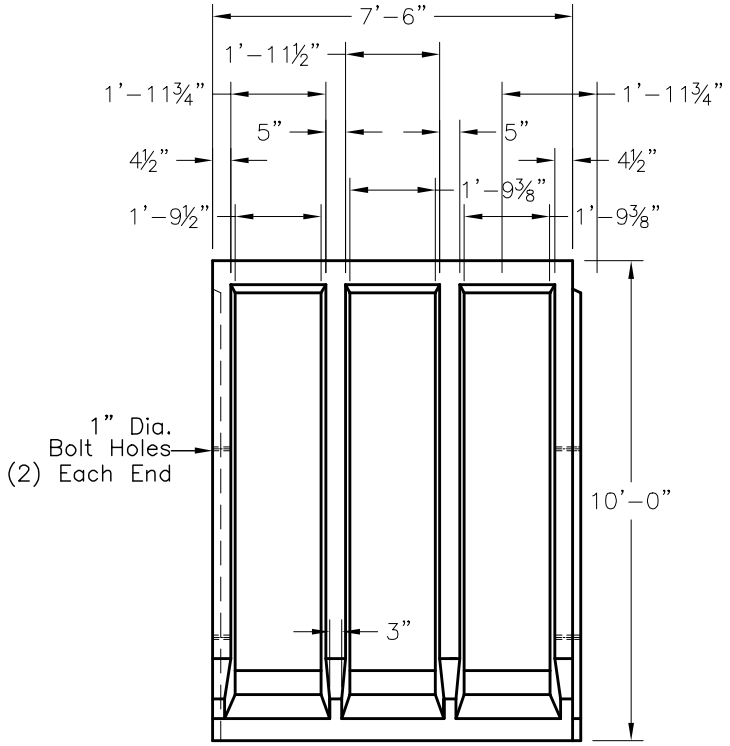

FRONT ELEVATION

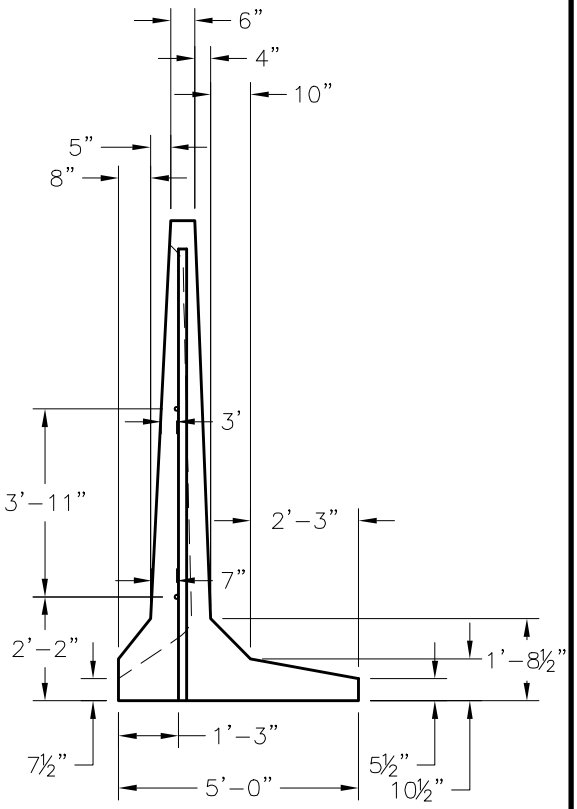

SIDE ELEVATION

Oldcastle Precast®

RW-10

FILE NAME: 325TRGRW10_DET.DWG

ISSUE DATE: January, 2008

www.oldcastleprecast.com

10'-0" x 7'-6"
Retaining Wall
9,500 Lbs.

Copyright © 2008 Oldcastle Precast®