NOTES:

1. Concrete : 5,000 P.S.I Minimum Strength @ 28 Days
2. Steel Reinforcing– ASTM A–615, Grade 60.
3. Cover to Steel–1" Minimum
4. Vault are Designed to Meet ASTM C858 and ACI 318 with AASHTO HS–20 Loading
5. Construction Joint–Sealed with 1"Dia Butyl Rubber Resin or Equivalent
6. Approx. Wt. Slab Top Pc. = 1.3 Tons
   Approx. Wt. Bottom Pc. = 3.6 Tons

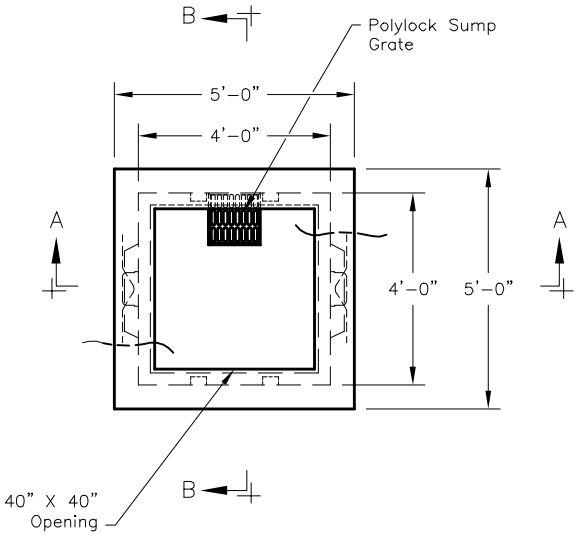

PLAN VIEW

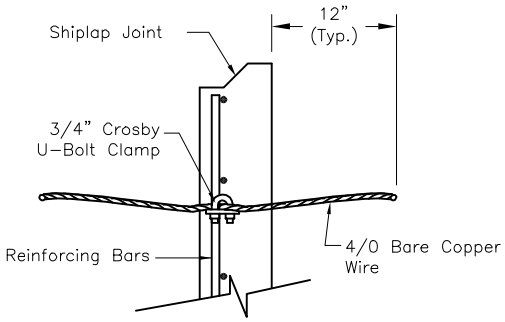

DETAIL "A"

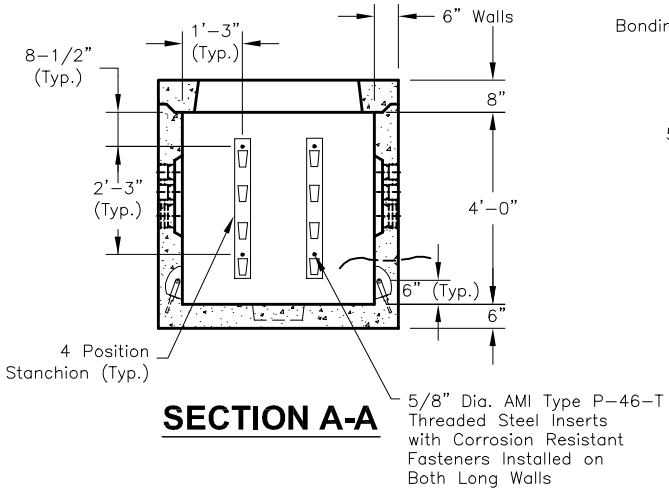

SECTION A-A

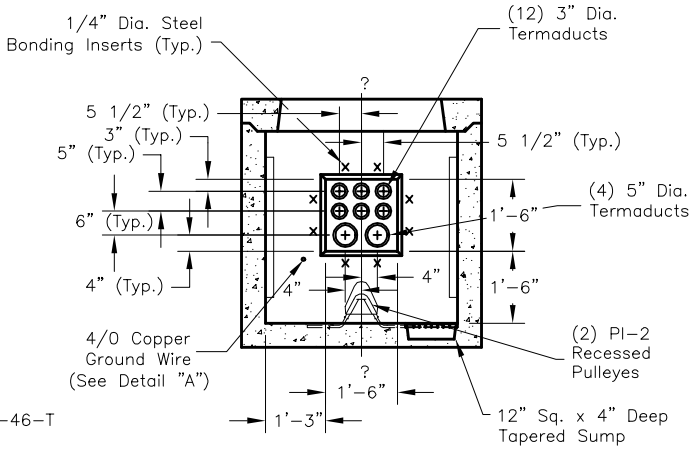

SECTION B-B

Oldcastle Precast®

NS-4X4X4

FILE NAME: 324UEENS4X4X4_DET.DWG

ISSUE DATE: January, 2008

www.oldcastleprecast.com

4'-0" x 4'-0" x 4'-0" I.D.
NSTAR Utility Vault
 # M1201 - Cat. # 16246

Copyright © 2008 Oldcastle Precast